VESTEL
MOBILITY

ELECTRIC VEHICLE CHARGER
EVC03 DC SIRIUS SERIES

Installation Guideline

CONTENTS

1 - SAFETY INFORMATION 2
1.1 - SAFETY WARNINGS 2
1.2 - INSTRUCTIONS FOR DEALING WITH A FIRE AT ELECTRIC VEHICLE CHARGING STATION 3
1.3 - GROUND CONNECTION WARNINGS 4
1.4 - POWER CABLES, PLUGS AND CHARGING CABLE WARNINGS 4
1.5 - REQUIRED UPSTREAM PROTECTIONS 5
2 - DESCRIPTION 6
3 - GENERAL INFORMATION 7
3.1 - INTRODUCTION OF THE PRODUCT COMPONENTS 7
3.2 - DIMENSIONAL DRAWINGS 8
4 - REQUIRED EQUIPMENT, TOOLS AND ACCESSORIES 9
4.1 - SUPPLIED INSTALLATION EQUIPMENTS AND ACCESSORIES 9
4.2 - RECOMMENDED EQUIPMENTS AND TOOLS 9
5 - TECHNICAL SPECIFICATIONS 10
6 - INSTALLING CHARGING STATION 13
6.1 - UNPACK CHARGING STATION 13
6.2 - FOUNDATION, ALIGNMENT & PLACEMENT 14
6.3 - OPENING SIDE COVERS 19
6.4 - OPENING FRONT COVER 20
6.5 - CABLE INSTALLATION 22
6.5.1 - OPENING SIDE COVER AND CABLE CONNECTION 22
6.5.2 - SIM CARD CONNECTION 24
6.5.3 - ELECTRICAL SCHEMATIC 25
6.6 - COMMISSIONING 26
6.6.1 - CONNECT OCPP OVER ETHERNET 26
6.6.2 - CONNECT PC TO THE SAME NETWORK WITH HMI BOARD 26
6.6.3 - OPENING WEB CONFIGURATION INTERFACE WITH BROWSER 27
6.6.4 - WEB CONFIGURATION INTERFACE 28
6.6.4.1 - GENERAL SETTINGS 29
6.6.4.2 - OCPP SETTINGS 29
6.6.4.3 - NETWORK INTERFACES 30
6.6.4.4 - POWER MANAGEMENT 30
6.6.4.5 - SYSTEM MAINTENANCE 30
6.7 - CLOSE COVER 31
7 - PERIODIC MAINTENANCE LIST 34
8 - WIRELESS LAN TRANSMITTER SPECIFICATIONS 36

© 2026 VESTEL MOBILITY - All rights reserved

1 - SAFETY INFORMATION

CAUTION

RISK OF ELECTRIC SHOCK

CAUTION: ELECTRIC VEHICLE CHARGER DEVICE SHALL BE MOUNTED BY A LICENSED OR AN EXPERIENCED ELECTRICIAN AS PER ANY REGIONAL OR NATIONAL ELECTRIC REGULATIONS AND STANDARDS IN EFFECT.

CAUTION

The AC grid connection and the electric vehicle charger's load plan are examined and approved by the electrical regulations and standards of the related region or country determined by the authorities. In the installation of multiple electric vehicle chargers, the load plan will be determined accordingly. The manufacturer shall not be liable in any way, directly or indirectly, for damages or risks caused by the errors that may occur due to AC grid connection or load planning.

CAUTION: FOR DEVICES WITHOUT EMERGENCY BUTTON;

If any suspicious or emergency situation arises at the charging station aside from normal operation, start by halting the charging process through the vehicle (using the appropriate switch or button, which may vary depending on the model), and then disconnect the socket. As an alternative option, consider switching off the MCB or RCCB in the panel where the product is energized by the installer.

IMPORTANT - Please read these instructions fully before installing or operating

1.1 - SAFETY WARNINGS

- Keep this manual in a safe place. These safety and operating instructions must be kept in a safe place for future reference.
- Check that the voltage marked on the rating label and do not use charging station without appropriate mains voltage.
- Do not continue to operate the unit if you are in any doubt about it working normally, or if it is damaged in any way - switch off the mains supply circuit breakers (MCCB and RCCB) in upstream distribution panel. Consult your local dealer.
- The ambient temperature range during charging should be between –35 ˚C and +50 ˚C (without direct sunlight) and at a relative humidity of between 5 % and 95 %. Use the charging station only within these specified operating parameters.
- The device location should be selected to avoid excessive heating of the charging station. High operating temperature caused by direct sunlight or heating sources, may cause reduction of charging current or temporary interruption of charging process.
- The charging station is intended for outdoor and indoor use. It can also be used in public places.
- To reduce the risk of fire, electric shock or product damage, do not expose this unit to severe rain, snow, electrical storm or other severe weathers. Moreover, the charging station shall not be exposed to spilled or splashed liquids.

© 2026 VESTEL MOBILITY - All rights reserved

- Do not touch end terminals, electric vehicle connector and other hazardous live parts of the charging station with sharp metallic objects.
- Avoid exposure to heat sources and place the unit away from flammable, explosive, harsh, or combustible materials, chemicals, or vapors.
- Risk of Explosion. This equipment has internal arcing or sparking parts which should not be exposed to flammable vapors. It should not be located in a recessed area or below floor level.
- To prevent risk of explosion and electric shock, ensure that the specified Circuit Breaker and RCD are connected to building grid.
- Charging Station bottom must be at (or above) the ground level.
- Adaptors or conversion adapters are not allowed to be used. Cable extension sets are not allowed to be used.
- The allowed current value of the service socket is maximum 10 A.

WARNING: Never let people (including children) with reduced physical, sensory or mental capabilities or lack of experience and or knowledge use electrical devices unsupervised.

CAUTION: This vehicle charger unit is intended only for charging electric vehicles not requiring ventilation during charging.

1.2 - INSTRUCTIONS FOR DEALING WITH A FIRE AT ELECTRIC VEHICLE CHARGING STATION

- Personal Safety: If you notice a fire or signs of danger, your own safety is the most important. Do not take risks.
- Immediate Notification of Emergency Services: Contact the appropriate emergency services in your region. Dial 998 or 112 the emergency number.
- Discontinuing Charging: If safe to do so, disconnect the charging cable from the vehicle and the charging station.
- Use of Fire Extinguishing Agents: If a fire extinguisher or other fire-fighting equipment is nearby and you are trained to use them, attempt to extinguish the fire. However, never risk your own safety.
- Avoid Direct Contact with the Fire: Do not attempt to extinguish the fire if you do not have the appropriate equipment or knowledge, or if the fire is too large or dangerous.
- Move Away from the Station: If the fire is uncontrolled or growing in strength, move away from the charging station while maintaining a safe distance.
- Avoid Inhaling Smoke: Try to avoid inhaling smoke. If possible, cover your nose and mouth with a damp cloth or clothing.
- Warn Others in the Area: Inform others in the vicinity about the fire hazard and encourage them to leave the area.
- Wait for Emergency Services: After safely leaving the area, wait for the arrival of emergency services at a location that is safe for you.
- No Return to the Station Premises: Do not return to the charging station premises until the emergency services have completed their operation.
- Reporting the Incident: Contact customer support to report the incident.

© 2026 VESTEL MOBILITY - All rights reserved

Remember, safety is paramount. In the event of a fire, always consult with local emergency services and follow their instructions.

1.3 - GROUND CONNECTION WARNINGS

- Charging station must be connected to a centrally grounded system. The ground conductor entering the charging station must be connected to the equipment grounding lug inside the charger. This should be run with circuit conductors and connected to the equipment grounding bar or lead on the charging station. Connections to the charging station are the responsibility of the installer and purchaser.
- To reduce the risk of electrical shock, connect only to properly grounded outlets.
- **WARNING** : Make sure that during installing and using, the charging station is constantly and properly grounded.

1.4 - POWER CABLES, PLUGS and CHARGING CABLE WARNINGS

- Be sure that plugs and sockets are compatible on charging station side.
- A damaged charging cable can cause fire or give you an electric shock. Do not use this product if the flexible Charging cable or vehicle cable is frayed, has broken insulation, or shows any other signs of damage.
- Ensure that the charge cable is well positioned thus; it will not be stepped on, tripped over, or subjected to damage or stress.
- Do not forcefully pull the charge cable or damage it with sharp objects.
- Never touch the power cable/plug or vehicle cable with wet hands as this could cause a short circuit or electric shock.
- To avoid a risk of fire or electric shock, do not use this device with an extension cable. If the mains cable or vehicle cable is damaged it must be replaced by the manufacturer, its service agent, or similarly qualified persons in order to avoid a hazard.
- Use appropriate protection when connecting to the main power distribution cable.

© 2026 VESTEL MOBILITY - All rights reserved

1.5 - REQUIRED UPSTREAM PROTECTIONS

- Class-I/B Lightning Protection must be connected to the upstream distribution panel.*The charger contains Class II/C Type Surge Protector Device (SPD).
- MCCB (Molded Case Circuit Breaker) and Type-A RCD (Residual Current Device) must be connected to the upstream distribution panel. MCCB/RCD must disconnect all live conductors. The residual current sensitivity of Type-A RCD should be set to 300mA.

Model	Power	Input Voltage	Maximum Input AC current
EVC03-DC HP400**	400kW	400V (nom.)	616A
		360V (-%10)	685A
EVC03-DC HP320UP	320kW	400V (nom.)	493A
		360V (-%10)	548A

- Cable cross-sections must be selected by the installer in accordance with local and international standards, considering the specified maximum AC input current values, minimum allowed input voltage values, installation distances, cable type, conduit type and mounting location conditions.
- PE and Neutral cable cross-section should be half of the Phase cable cross-section.
- It is recommended to use a CAT6 SFTP Ethernet cable for LAN communication.
- Cables must be suitable for outdoor use.
- Cables must be UV-protected and suitable for installation in underground conduits in compliance with local regulations.
- The AC input cable glands supplied with the product are suitable for cables with diameters in the range of 18-25 mm.
- Recommended cable lug dimensions for AC line connections are provided below.

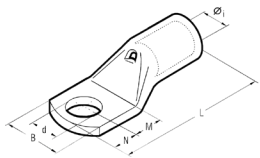

	LUG	Øi (min)	B	M	N	L	d	Tightening Torque
AC phases	M10	19,2 mm	35,5 mm	13,0 mm	11,0 mm	76,0 mm	10,5 mm	25 Nm
PE								
Neutral								

© 2026 VESTEL MOBILITY - All rights reserved

NOTE: If the charging station power is planned to be upgraded to 400 kW after installation, the AC supply cable cross-sections and related protection devices must be selected according to the maximum input power.

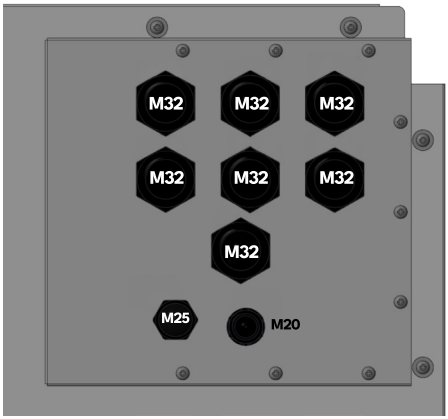

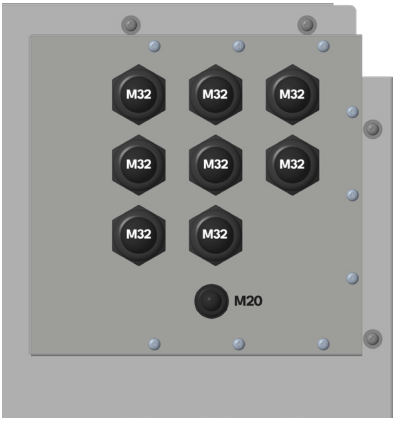

NOTE: The mounting plate and glands given in the image are factory output according to 320/400kW power. According to the product power to be preferred in the installations, the mounting plate revisions due to the cable cross-section belong to the customer.

2 - DESCRIPTION

Model Name	**EVC03-HP Series (Name Coding: EVC03-HP***)** 1st Asterisk (*) : Rated Power 400 : 400 kW DC Power Output 320 : 320 kW DC Power Output 2nd Asterisk (*) : DC output combination 1 C : CCS output (Liquid cooled or non-cooled) 3rd Asterisk (*) : DC output combination 2 C : CCS output (Liquid cooled or non-cooled)
Cabinet	EVC03-HP400VE

© 2026 VESTEL MOBILITY - All rights reserved

3 - GENERAL INFORMATION

3.1 - INTRODUCTION OF THE PRODUCT COMPONENTS

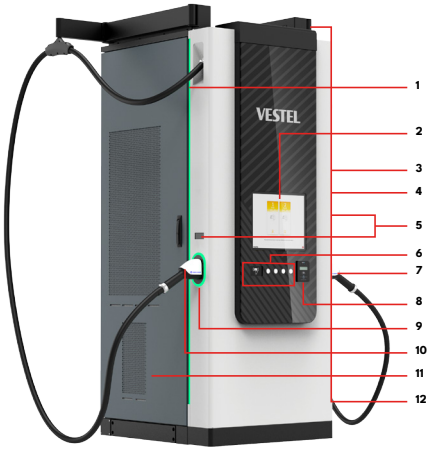

1- LED

2- Display

3- Access cover for fan, relay and mains switch

4- Emergency stop button (optional)

5- MID meter (optional)

6- RFID reader, buttons

7- DC-CCS output plug

8- Credit card reader (optional)

9- CCS dummy socket

10- DC-CCS output plug

11- Access cover for CTB, PLC card and HMI, power modules.

12- Cable management (optional)

All products images are given for as a representative

© 2026 VESTEL MOBILITY - All rights reserved

3.2 - DIMENSIONAL DRAWINGS

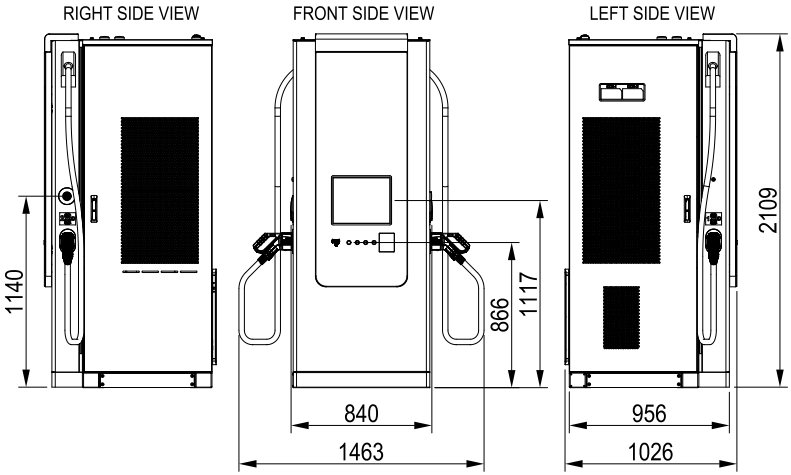

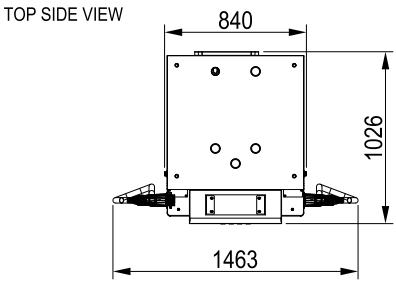

© 2026 VESTEL MOBILITY - All rights reserved

4 - REQUIRED EQUIPMENT, TOOLS and ACCESSORIES

4.1 - SUPPLIED INSTALLATION EQUIPMENTS and ACCESSORIES

Special Spanner M50 x M40	
Flange M12 Bolts x4	
1 set (x2) Lock Keys	

4.2 - RECOMMENDED EQUIPMENTS and TOOLS

Ø20 Drill Bit	Impact Drill	PC	Philips Screwdriver
RJ45 Crimping Tool	Cat5e or cat6 ethernet cable	Spanner set	Hammer
M20 Steel Expansion Bolt x4	RJ45 Male Connector	T25 Screwdriver	20 - 200 Nm D: 40mm H: 43mm

© 2026 VESTEL MOBILITY - All rights reserved

5 - TECHNICAL SPECIFICATIONS

IEC Protection class		Class - I
Power Input	**Input Rating**	230/400 VAC ±10% , 50/60 Hz, 612 A / phase
	Connection	3P - N - PE (TN-S, TN-C-S or TT)
	Residual Current Monitoring	230 VAC RCBO 1P+N, Type A, 30mA (system)
	Power Factor	> 0.99
	Efficiency	> % 95
	Standby Power	< 180W
CCS Output - 1	**Max Power**	**320/400 kW options** • 1 x 320 kW or 1 x 400 kW • 2 x 160 kW or 2 x 200 kW
	Voltage Range	200 – 920 V DC
	Maximum Current	**320/400 kW options** Liquid cooled or non-cooled cable variants are available. Derating may be applied. 500 A continuous, up to 750 A with liquid cooled cable • 1 x 320 kW or 1 x 400 kW • 2 x 160 kW or 2 x 200 kW 300 A continuous, up to 500 A with non-cooled cable • 1 x 320 kW or 1 x 400 kW • 2 x 160 kW or 2 x 200 kW
	Interface Compliance	IEC 62196-1 / 3 IEC 62196-3-1 IEC 61851-1 / 23 / 24 ISO 15118-1 / 2 / 3 DIN 70121

© 2026 VESTEL MOBILITY - All rights reserved

CCS Output - 2	**Max Power**	**320/400 kW options** • 1 x 320 kW or 1 x 400 kW • 2 x 160 kW or 2 x 200 kW
	Voltage Range	200 – 920 V DC
	Maximum Current	**320/400 kW options** Liquid cooled or non-cooled cable variants are available. Derating may be applied. 500 A continuous, up to 750 A with liquid cooled cable • 1 x 320 kW or 1 x 400 kW • 2 x 160 kW or 2 x 200 kW 300 A continuous, up to 500 A with non-cooled cable • 1 x 320 kW or 1 x 400 kW • 2 x 160 kW or 2 x 200 kW
	Interface Compliance	IEC 62196-1 / 3 IEC 62196-3-1 IEC 61851-1 / 23 / 24 ISO 15118-1 / 2 / 3 DIN 70121
Internal Protections		Residual current sensing, Insulation monitoring, Over current / Over voltage / Under voltage / Short circuit / Over Temperature / Surge Protection

USER INTERFACE & AUTHENTICATION

Display	17” Color TFT LCD
User Interface	Resistive Touch Screen
RFID Reader Module	ISO-14443A/B and ISO-15693
Payment module (Optional)	Contactless Credit Card kit options Please contact with the following service providers for installation. https://www.payter.com/contact https://www.nayax.com/contact/

© 2026 VESTEL MOBILITY - All rights reserved

CONNECTIVITY

LAN Connectivity	Ethernet
WLAN Connectivity	2.4GHz/5GHz: 802.11 a/b/g/n/ac
Cellular Connectivity	GSM 900/1800 UMTS 900/2100 LTE Band 1/3/7/8/20/28A
OCPP Specification	OCPP 1.6 J

MECHANICAL SPECIFICATIONS

Material		Metal Panel	
Protection Degree		Ingress Protection Impact Protection	IP55 IK10
Cooling		Forced Air Cooling Fan	
Cable Length		CCS: 4.50 m CCS: 4.50 m	
Dimensions	**product**	2109 mm (height) x 840 mm (width) x 1026 mm (depth)	
	with packing	2300.0 mm (height) x 1000.0 mm (width) x 1090.0 mm (depth)	
Weight	**product**	636 kg	
	with packing	828.5 kg	

ENVIRONMENTAL TECHNICAL SPECIFICATIONS

Operating Condition	Temperature	-35˚C to + 50˚C (Derating is applied over +40˚C to +50 ˚C) For products with credit card option-20˚C to + 50˚C
	Humidity	5% to 95% (Relative humidity, non-condensing)
	Altitude	0 - 2,000 m
Storage Condition	Temperature	-40 ˚C to 80 ˚C
	Humidity	5% - 95% (relative humidity, non-condensing)

If the product is kept de-energised in a cold environment (t < -20C), it must be allowed to warm up for a certain period of time before the current is drawn.

© 2026 VESTEL MOBILITY - All rights reserved

6 - INSTALLING CHARGING STATION

Screws inside the product are recommended to be exceeding 240 hours Salt Fog test under ASTM B117 Method. Screws outside the product are recommended to be exceeding 720 hours.

WARNING: RISK OF ELECTRICAL SHOCK AND INJURY. POWER OFF THE CHARGING STATION MAIN SUPPLY BEFORE ANY INSTALLATION STEPS.

WARNING: TO AVOID PERSONAL INJURY OR DAMAGE THE CHARGING STATION, ENSURE THE INSTALLATION AREA IS SUITABLE AND THE FLOOR CAN WITHSTAND THE WEIGHT OF THE CHARGING STATION.

6.1 - UNPACK CHARGING STATION

Unpack the charging station as shown in figures below.

Note that, front and top covers are marked as shown in the figures.

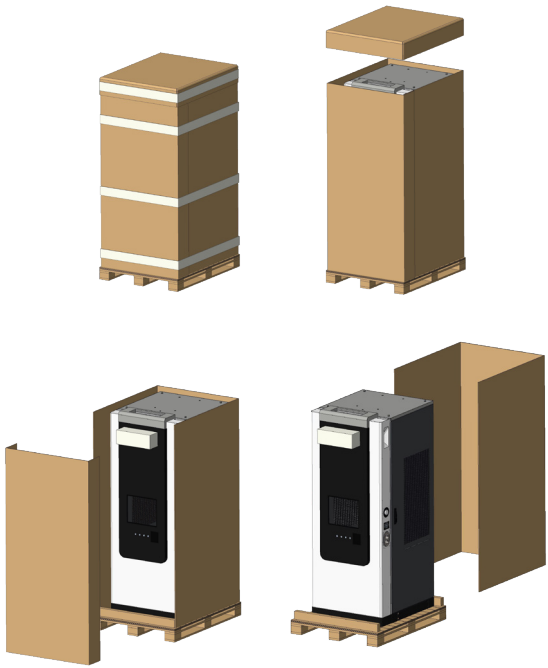

All products images are given for as a representative

© 2026 VESTEL MOBILITY - All rights reserved

6.2 - FOUNDATION, ALIGNMENT & PLACEMENT

The concrete foundation dimensions are shown as below:

CONCRETE FOUNDATION

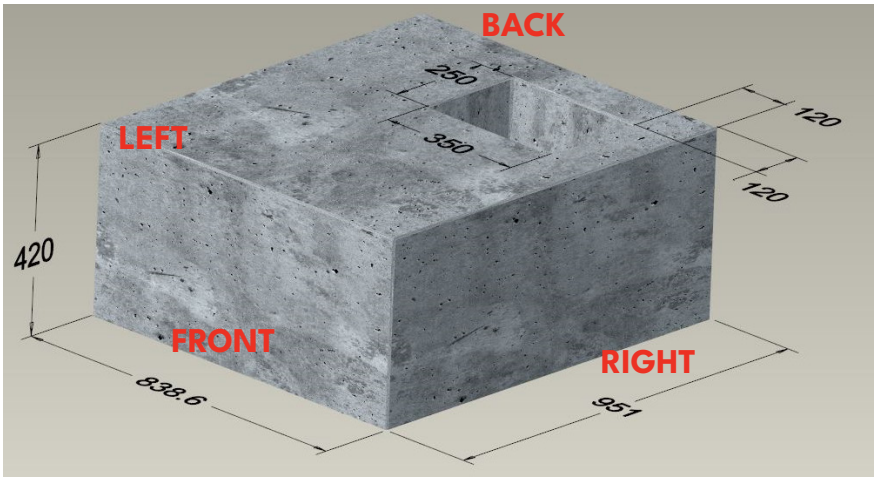

1. Dig a foundation pit in the ground according to the dimensions of the concrete foundation shown at figure.

2. For installation, a minimum distance of 1 meter must be left from the right side, left side and rear side of the device.

3. Make the rectangular hole for cables which come from main supply (3P+N+PE and Communication) on the concrete foundation from top to bottom. The dimensions and the position on the concrete foundation are shown at figure.

4. Make the cable duct on the concrete foundation. There are 4 cable duct options according to the direction from main supply. The cable duct can be at one of the right(A), left(C), front(B) and back(D) side of the concrete foundation. For these 4 options; The position and diameter of the cable duct are shown at figure.

5. The top surface of the foundation must be at least 20 mm above the ground.

© 2026 VESTEL MOBILITY - All rights reserved

FRONT BACK VIEW

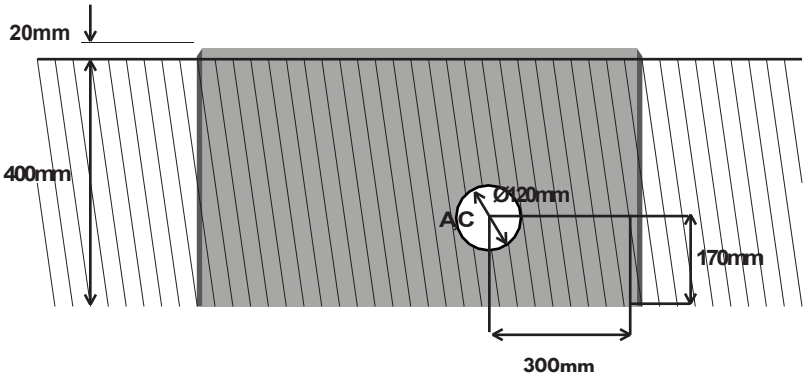

LEFT RIGHT VIEW

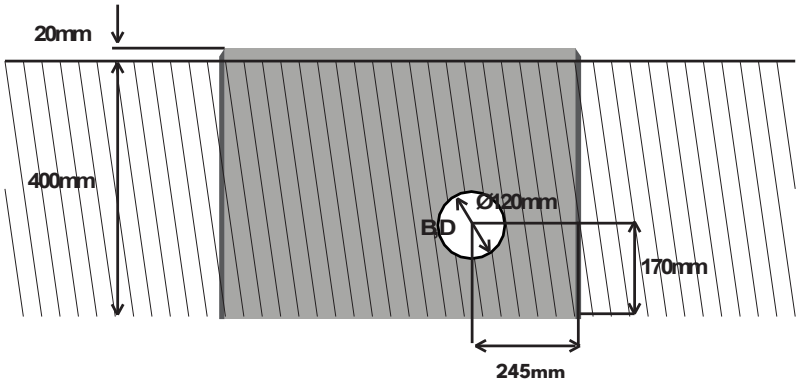

All options of cable ducts A,B,C and D are shown

6. Open the right side cover of the product using the keys provided by turning the handle counterclockwise with wide angle.

7. The cable length of 80 cm should be available above the foundation for cable assembly in cabinet. figure below.

8. Drill 4 holes on the concrete foundation with dimensions shown at figure below and tap M20x170 mm expansion bolt in these holes stated as shown at figure below.

9. Remove the (left and right) bottom side plates by unscrewing the plates.

© 2026 VESTEL MOBILITY - All rights reserved

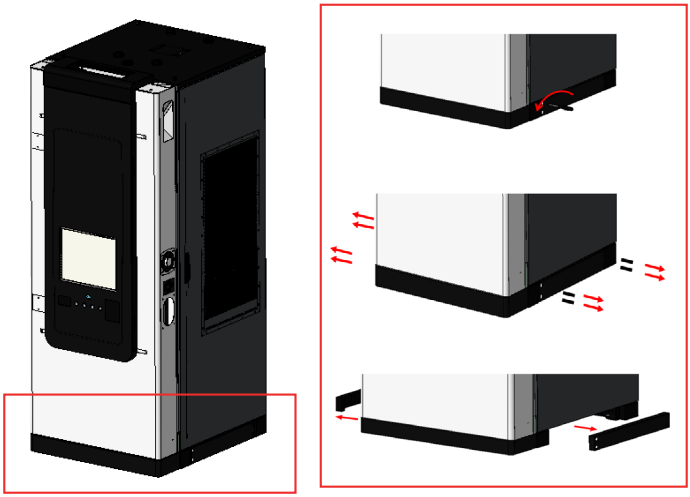

All products images are given for as a representative

10. Lift the charging station by lifting eyebolts and place the station on the concrete foundation such that the base holes of the charger are aligned with these expansion bolts in figure below. Tighten the expansion bolts with nuts. The type of expansion bolts used are shown at figure below.

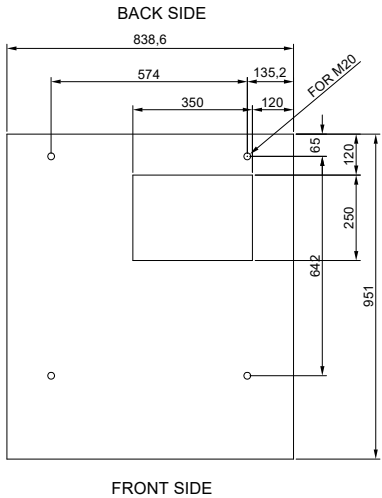

© 2026 VESTEL MOBILITY - All rights reserved

M20

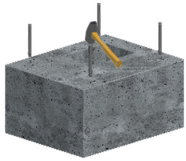

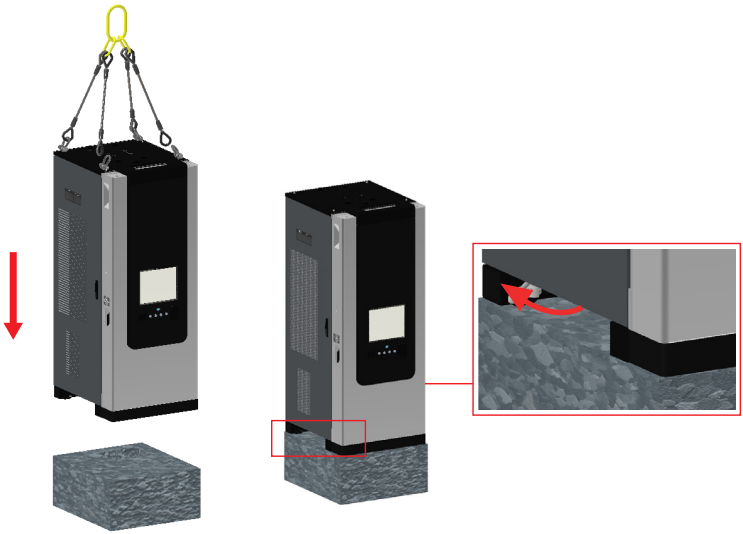

All products images are given for as a representative

© 2026 VESTEL MOBILITY - All rights reserved

11. Remove the eyebolts after placement of the charging station. Plug the bolts with the washers.

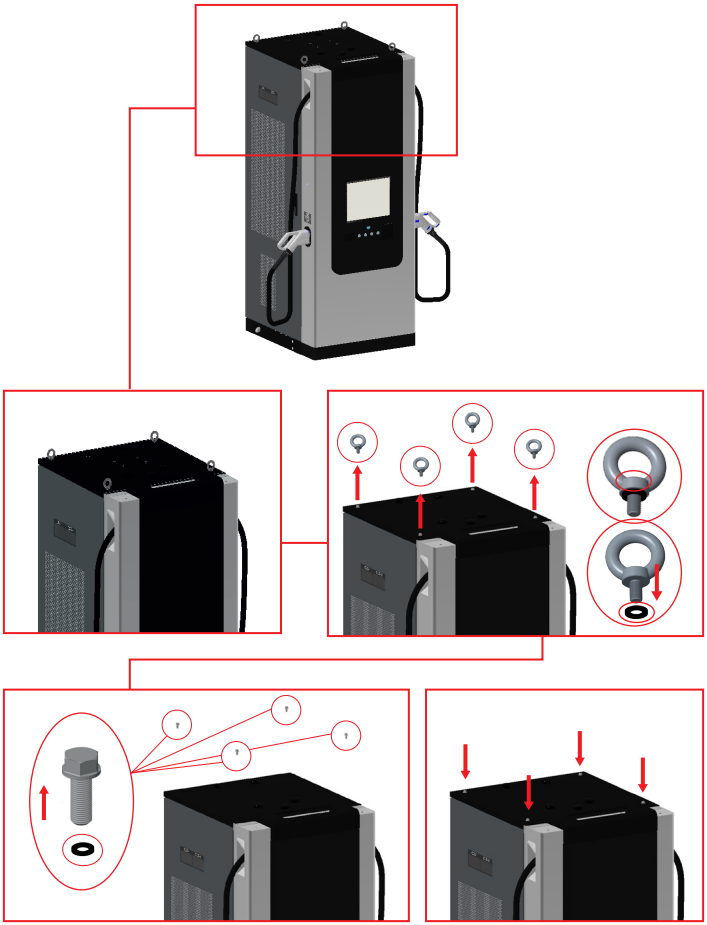

All products images are given for as a representative

You can continue following “Cable Installation” steps.

© 2026 VESTEL MOBILITY - All rights reserved

6.3 - OPENING SIDE COVERS

Use the key provided to unlock the side cover.

Pull the handle slightly up. Turn the handle through the back side of the charging station with wide-angle.

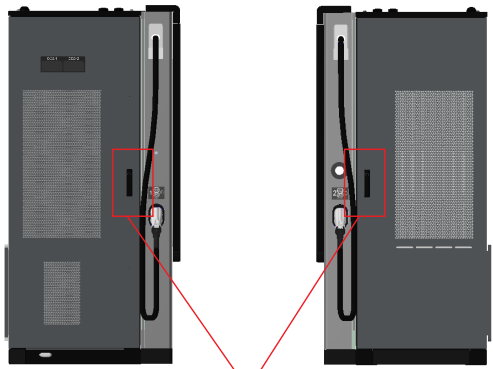

Step.1

Step.2

Step.3

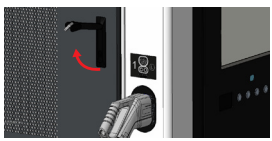

Step.4

Step.5

Step.6

All products images are given for as a representative

© 2026 VESTEL MOBILITY - All rights reserved

6.4 - OPENING FRONT COVER

Option 1: Insert the key into the marked lock on the front left column and turn it 90˚ to open the front cover. After completing the procedures, close the front cover by pushing at the indicated points.

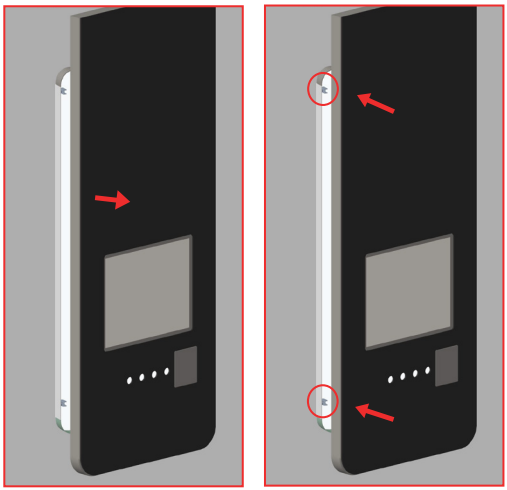

All products images are given for as a representative

© 2026 VESTEL MOBILITY - All rights reserved

Option 2: Turn the handle on the front left column to open the front cover. After completing the procedures, close the front cover by pushing at the indicated points.

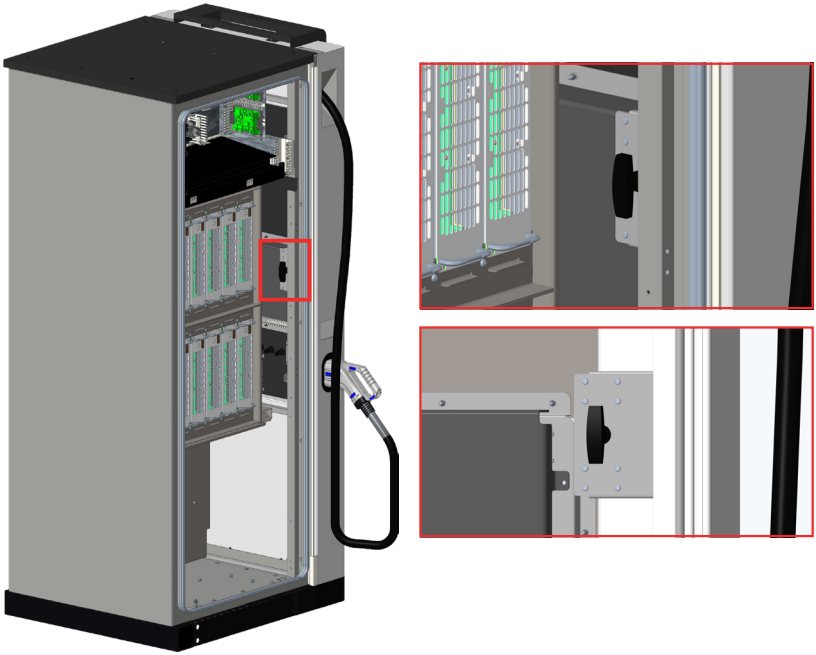

All products images are given for as a representative

© 2026 VESTEL MOBILITY - All rights reserved

6.5 - CABLE INSTALLATION

6.5.1 - OPENING SIDE COVER AND CABLE CONNECTION

1- Open the right side cover of the product using the keys provided by turning the handle counterclockwise with wide angle.

2- Remove the screws and isolator plate covering the AC Mains cable in the bottom right corner.

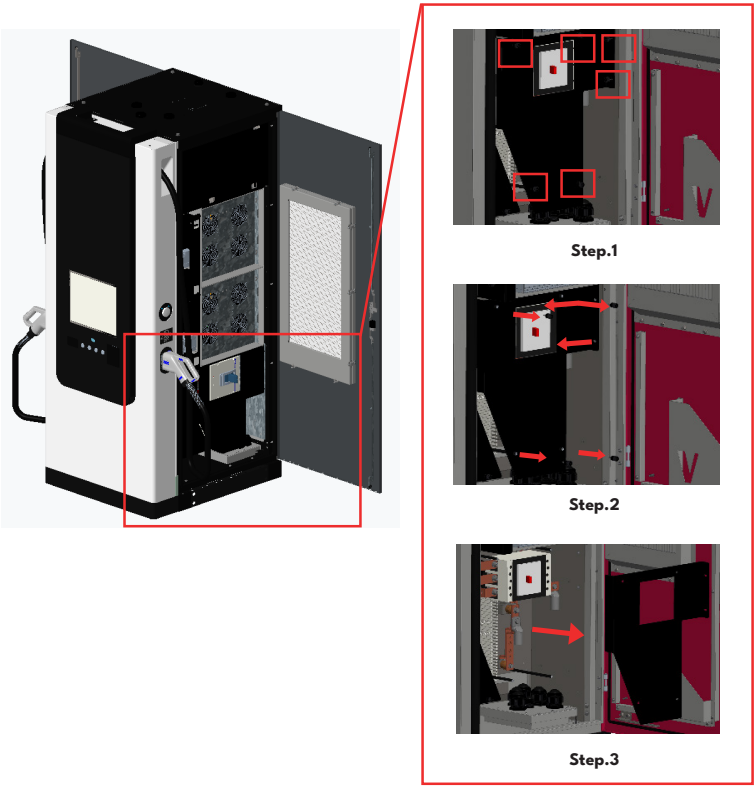

All products images are given for as a representative

Crimping lug positions:

L1, L2, L3, PE, and Neutral crimping lugs shall be selected according to the cable cross-sections specified on page 5.

This structure is designed so that the cables with low elasticity can be mounted with the crimping lugs on the busbar. Therefore the center points of the cable glands and the crimping lugs are aligned with the same axis (z-axis) as shown in the figure. The installation must be done accordingly as shown in the figure.

© 2026 VESTEL MOBILITY - All rights reserved

Contact surface of cable gland nuts and crimping lugs:
Surface contact of crimping lugs and cable glands are shown in brown color in the figure. Mounting surface of crimping lugs corresponds to %92 of the surface data indicated in the crimping lug datasheet compatible with cable cross-section.

3- Pass the cables through the cable glands at the bottom of the charging station.

4- Connect the AC Mains cables. First connect “Line PE” cable, then “Line N” cable, finally three phase cables (“Line 1”, “Line 2”, “Line 3”) as shown below:

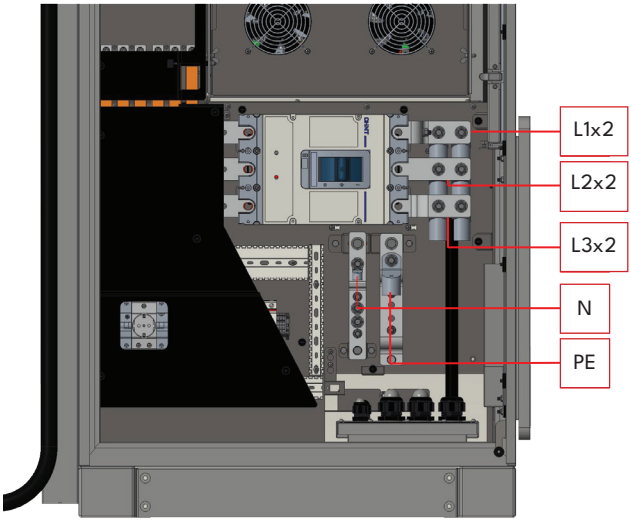

The phase sequence is counter clockwise rotation.

5- Tighten the cable glands using an adjustable wrench. 25 Nm.

© 2026 VESTEL MOBILITY - All rights reserved

6.5.2 - SIM CARD CONNECTION

See section “Opening side covers“ and insert the Micro SIM card in the cellular module SIM card slot as shown in the below figure.

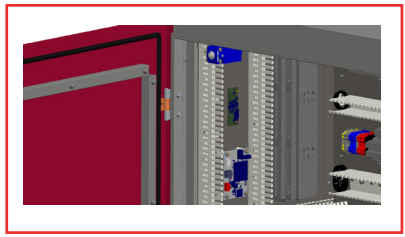

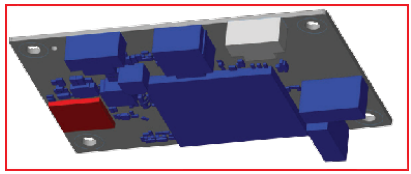

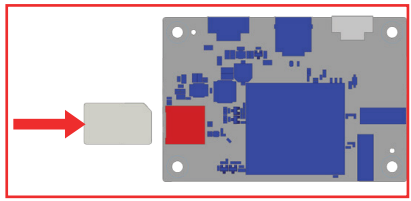

All products images are given for as a representative

© 2026 VESTEL MOBILITY - All rights reserved

6.5.3 - ELECTRICAL SCHEMATIC

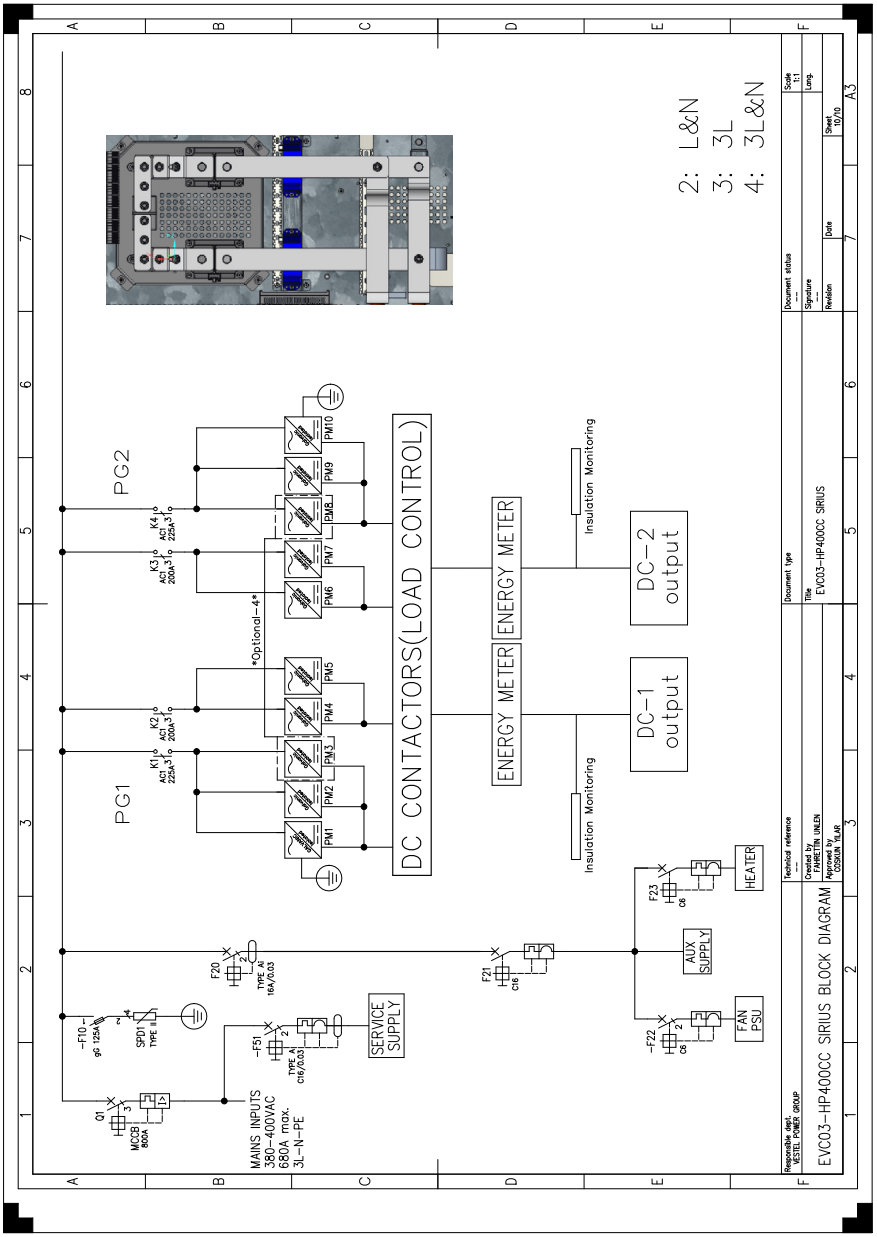

© 2026 VESTEL MOBILITY - All rights reserved

6.6 - COMMISSIONING

6.6.1 - CONNECT OCPP OVER ETHERNET

In order to connect your device to the internet over the cable and make the necessary adjustments, you must first prepare the ethernet cable and plug this cable into the locales that should be on the device.

To establish the relevant connection to DHCP port of the product, open the right cover of the product with the display facing forward. The ethernet cable to be connected can subsequently be routed through the cable gland, as shown in the illustration, and connected to the corresponding port.

Insert Ethernet cable through the cable gland. Terminate the Ethernet cable with RJ45 terminal and connect the cable to the Ethernet port as shown below.

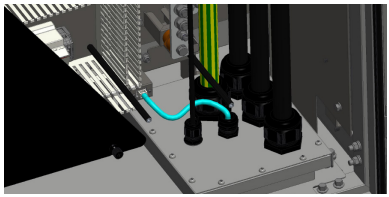

6.6.2 - CONNECT PC TO THE SAME NETWORK WITH HMI BOARD

In order to access Web Config UI, first you need to connect your PC and EV charger to the same ethernet switch or connect EV charger to your PC directly.

To establish the relevant connection to ethernet switch, open the left cover of the product with the display facing forward.

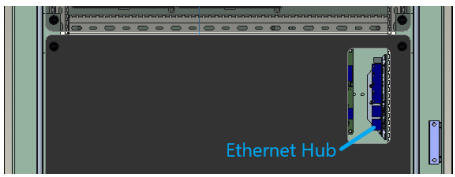

Power-on the charging station. Default IP address of HMI board is 192.168.0.10. For this reason, you need to give static IP to your PC in the same network with HMI board.

You should assign static IP address to your PC in 192.168.0.0/254 network which means that IP address should be in a range of between 192.168.0.1 and 192.168.0.254.

For example, 192.168.0.11 can be set as an static IP to your PC.

© 2026 VESTEL MOBILITY - All rights reserved

6.6.3 - OPENING WEB CONFIGURATION INTERFACE WITH BROWSER

Open your web browser and type 192.168.0.10 which is IP address of HMI board.

You will see login page on your browser;

Each product has a user name and password set as factory configuration.

In this section you can log in to the Web configuration interface by entering the configuration information printed on the label. User Name and Password informations are located on the label pasted to the Quick Start Guide as shown below.

Only for the first login you will be forced to change your password.

You can change password with Change Password Button in WEBUI login page or Administration Password section in the System Maintenance tab.

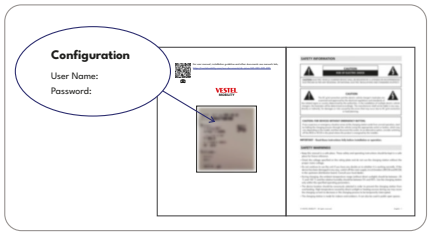

Visual representation is provided

Change Password:

If you click the “Change Password Button“ you will be redirected to the Change Password page.

Your password must be minimum 12 maximum 32 character and it contains at least two uppercase letters two lower case letters two number digits and two special characters.

After typing your current password and new password twice, you will be redirected to the login page again to log in with your new password.

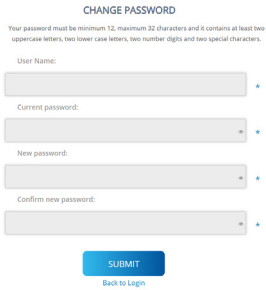

© 2026 VESTEL MOBILITY - All rights reserved

6.6.4 - WEB CONFIGURATION INTERFACE

You can change the web configuration interface language and log out of the web configuration interface with the buttons in the upper right corner of the page.

MAIN PAGE	The Main page provides an overview of the key system information and connection status of the EVC device. Below are the descriptions of each displayed parameter: **CP Serial Number:** Unique serial number of the device. It is used for device authentication and remote management. **HMI Software Version:** The software version of smart board (HMI) that runs the device's touchscreen interface. **Power Board Software Version:** The version of the software that controls power management and charging operations of device. **PLC Software Version:** The software version of power line communication board. **VCR Software Version:** The software version of the VCR (Voltage Current Resistance) board. **HPC Software Version:** The software version of the HPC (High Power Charger) control board used in the EV charging system. **OCPP Software Version:** The version of the Open Charge Point Protocol (OCPP) software, which enables communication with the charging network management system. **Duration after Power On:** The total time (in hours, minutes, and seconds) that has passed since the device was last powered on. Useful for uptime tracking and performance monitoring. **Connection Interface:** The current communication method used by device. It can be Ethernet, WLAN (Wi-Fi), or Cellular. **OCPP Device ID:** Unique identification number used by device when communicating with OCPP server. **Connector ID 1 Status:** The current status of charging Connector 1 (e.g., Available, Plugged, Charging, Faulted). **Connector ID 2 Status:** The current status of charging Connector 2 (e.g., Available, Plugged, Charging, Faulted).

© 2026 VESTEL MOBILITY - All rights reserved

6.6.4.1 - GENERAL SETTINGS

Default Interface Languages	HMI display language and web interface language can be selected from the general settings page.
Display Settings	• **Static** - Set brightness/outdoor lighting to a fixed level, options include Low/Medium/High • **Sensor Based** - Display brightness is changed based on given sensor value thresholds. • **Reduced Brightness in Inactive Mode** - Sets automatic brightness dimming when the screen is not in use. This option can be enabled or disabled. **Minimum Brightness Value -** Defines the minimum brightness for inactive mode. • **Show Charge Point ID** - Displays the charge point ID on screen (can be enabled/disabled).
Display Logo (Optional)	The user can upload left and right logos to display in the app UI and toggle their visibility using a switch button.
Tilt Threshold	The user can change the tilt threshold in angle. The tilt threshold as an angle is set to 30 for all angles by default. Tilt Threshold Range: 12 - 90
Display QR Code	The user can update the QR Code Settings for each connector on the device. QR Code can be enabled/disabled and if enabled, a limiting value for the QR Code String can be set.
Customer Service Number	You can reach customer service number from WEB UI screen. You can enable or disable it to display on the screen.
Timezone	The user can set the timezone.

6.6.4.2 - OCPP SETTINGS

The required settings for the OCPP connection (activating and deactivating the OCPP connection, entering the connection address, entering the charging station ID, etc.) are made on this page.

Adding a New RFID Card:

In the **Authorization Mode** dropdown menu, select **Authorize with Whitelist** from OCPP Settings tab in the interface. In the **Manage RFID Local List** section, enter the unique ID of the RFID card you want to authorize into the text field.

Once entered, click the **Add** button to include the card into the list. Press the save button to apply the changes.

To apply the update, a **Hard Reset** must be performed. During this process, a confirmation prompt will appear – be sure to confirm the action by selecting **Confirm**.

Once the product restarts, return to the same configuration page and ensure that the newly added card appears in the RFID list.

© 2026 VESTEL MOBILITY - All rights reserved

6.6.4.3 - NETWORK INTERFACES

There are three types of network interfaces in this page; Cellular, Ethernet (LAN), Wi-Fi.
Select interfaces' modes as "Enabled" if you want to activate it.
You should fill all spaces in suitable formats.

6.6.4.4 - POWER MANAGEMENT

DC Output Configuration	DC Output Configuration(deprecated-will be renamed as Model Code).
Charge Point Maximum Power	Maximum Power value is used to set the maximum output power delivered from charging station.
Fail Safe Power	Fail Safe Power Limiting feature is used to limit the station output power when the OCPP Server connection is lost. When feature is enabled, the user can set output power value. The default value is 10 kW.
Power Module Configurations	DC power sharing enabled option is used to allow CPO to decide if power sharing will be active for power modules. Example: For a 60kW product which has 2 30kW power modules, if DC Power Sharing Enabled is set to True, 2 connectors will be available for charging at maximum of 30kW output. If it is set to False, Then only 1 connector will be available for charging and while one of the connectors is in charging state, other connector status will be set to Unavailable.
Connector Settings	Connector type and corresponding maximum output power is displayed under Connector Settings menu.

6.6.4.5 - SYSTEM MAINTENANCE

Log Files	The logs related to the device can be downloaded from this section.
Firmware Updates	The firmware file of device can be uploaded and upgraded.
Configuration Backup & Restore	The device-related configurations can be backed up and restored from this tab.
System reset	You can proceed to this section to perform Hard Reset and Soft Reset.
Administration Password	The administrator password can be changed from this tab.
Factory Default Configuration	You can reset your device to its factory settings.

© 2026 VESTEL MOBILITY - All rights reserved

6.7 - CLOSE COVER

1. Place the (left and right) bottom side plates back and tighten the bolts.

2. Ensure all the cables and plugs are not damaged.

3. Place and tighten the screws of the isolator plate covering the AC Mains cable.

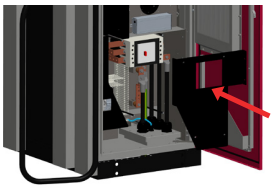

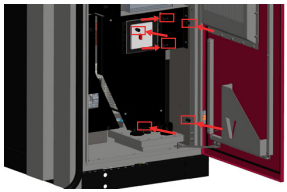

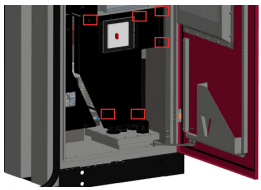

4. Switch on the MCCB.

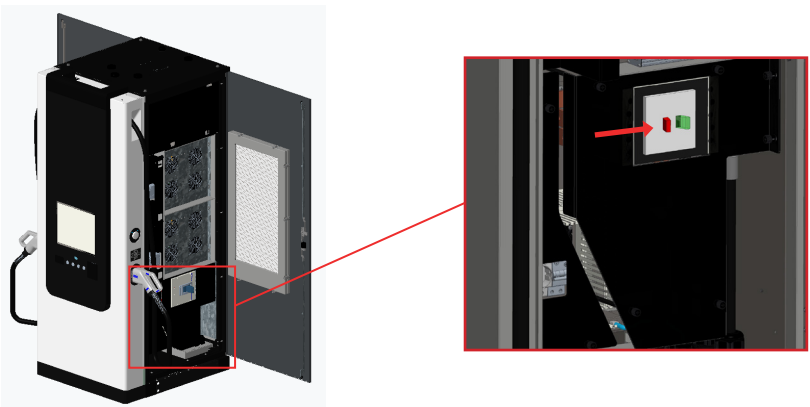

5. Control of level of coolant in cooling unit.

(Only applicable for Liquid Cooled cable equipped models). (Optional)

© 2026 VESTEL MOBILITY - All rights reserved

First commissioning of the cooling unit with installed cables.

Make sure all pipes, sensors and cables are correctly fitted according to the installation instructions. To ensure a better filling process the coolant temperature should be above 12˚C. There are two case for level of coolant.

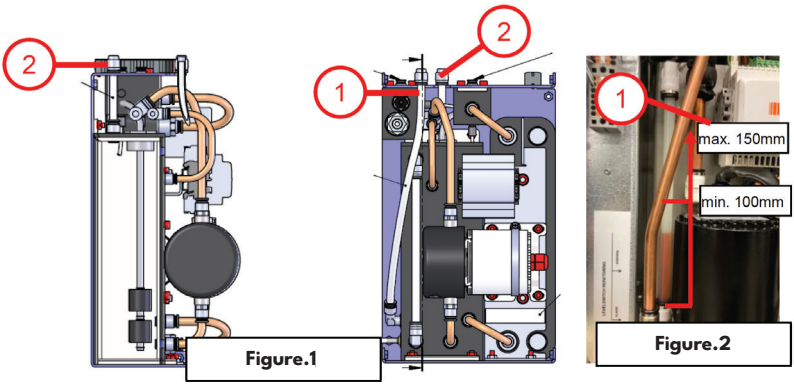

Figure.1

Figure.2

Case.1: Tank is prefilled (standard at delivery)

- Tank is prefilled to operate one cable with a maximal total length of 8m. Coolant level before connecting the cable is visible in the venting tube (Figure.1, no,2).
- Starting up the cooling system for 5min.

© 2026 VESTEL MOBILITY - All rights reserved

- If coolant level is below the warning level (Figure.2 no.1), refill coolant according to the instruction case.2

Case 2: Refill coolant to have the right amount of coolant in cooling system

General amount of coolant: 1.1dl per meter cable.

- Check: Coolant level must be as shown in Figure.2 no.1 (min. 100mm, max. 150mm).
- Open cap no.1 and no.2 (Figure.1, no.1 and no.2)
- Use a funnel to avoid spillage => connect the funnel to tube Figure.1, no.1
- Tube no.1 (Figure.1, no.1) => fill in coolant
- Tube no.2 (Figure.1, no.2) => venting hole
- Coolant level must be minimum 100mm and maximum 150mm according viewing pipe (Figure.2, no.1)
- Close cap no.1 and no.2 (Figure.1, no.2)
- Starting up the cooling system for 5min.
- Check: Coolant level must be as Figure.2 no.1. If coolant level is below 100mm, refill according instruction in case 2.

6. Close the right side cover of the product by turning the handle clockwise with a wide-angle as shown in the section “Opening side covers“using the keys provided.

© 2026 VESTEL MOBILITY - All rights reserved

7 - PERIODIC MAINTENANCE LIST

	Maintenance Period (years)									
	1	2	3	4	5	6	7	8	9	10
Air filters	R	R	R	R	R	R	R	R	R	R
Plugs (AC&DC)	I	I	I	I	I	I	I	I	I	I
Screen	C	C	C	C	C	C	C	C	C	C
Distribution elements (MCCB, MCB, RCCB, RCBO)	T	T	T	T	T	T	T	T	T	T
AC input and relay terminals	T	T	T	T	T	T	T	T	T	T
Fan	I	I	I	I	I	I	I	I	I	I
DC relay terminals	T	T	T	T	T	T	T	T	T	T
DC output cables and terminals	T	T	T	T	T	T	T	T	T	T
Cabinet body	C	C	C	C	C	C	C	C	C	C
Grounding resistance	M	M	M	M	M	M	M	M	M	M
Liquid cooling unit**	I	I	I	I	I	I	I	I	I	I
Liquid cooling unit coolant**	I	I	I	I	R	I	I	I	I	R

C : Clean

I : Inspect (check, confirm, clean, tighten or replace if required)

M : Measure

T : Tighten

R : Replace

Air filters

Air filters must be changed every year when it goes in for servicing.

Plugs (AC&DC)

All Plugs should be checked when going for maintenance. If the plug is broken or cracked, it should be replaced. In addition, a charge attempt should be made with all plugs.

Screen

When going for maintenance, the screen should be checked by pressing the touchscreen. It can be controlled by pressing all the functions on the screen. If there is no problem with the screen touch, the screen should be cleaned.

Distribution elements (MCCB, MCB, RCCB, RCBO)

The relevant section in the service manual must be consulted for the part to be inspected and the required checks and tightening must be done with a torque of 2 Nm for MCB and RCBO's and 35 Nm for MCCB when it goes in for servicing.

© 2026 VESTEL MOBILITY - All rights reserved

AC input and relay terminals

The relevant section in the service manual must be consulted for the part to be inspected and the required checks and tightening must be done when it goes in for servicing. Tightening must be done to 9 Nm for AC Contactors.

M6 bolts must be tightened to 8 Nm, M8 bolts to 20 Nm, M10 bolts to 25 Nm, M12 bolts to 45 Nm.

Fan

The fans must be visually inspected when it goes in for servicing. All broken or damaged fans must be replaced. If there is no problem with the fans, run a test charge. Check if the fans spin during this test charge.

DC relay terminals

The relevant section in the service manual must be consulted for the part to be inspected and the required checks and tightening must be done when it goes in for servicing. Tightening must be done to 10 Nm.

DC output cables and terminals

The DC output cables and terminals must be visually checked when it goes in for servicing. Check for loose or broken connections.

M6 bolts must be tightened to 8 Nm, M8 bolts to 20 Nm, M10 bolts to 25 Nm, M12 bolts to 45 Nm.

Cabinet body

The exterior cabinet must be cleaned when it goes in for servicing.

Grounding resistance

A system must be established with the omega just like measuring the ground resistance when it goes in for servicing. After the stakes are driven in, the voltage between the two stakes must be under 1V.

Liquid cooling unit **

Run a test charge with the liquid cooling plug (gun) when it goes in for servicing. The liquid should be seen to be flowing through the pipes on the cooling unit after waiting 5 minutes during the test charge.

Liquid cooling unit coolant**

The coolant in the liquid cooling unit must be checked when it goes in for servicing. If there is any dirt in the coolant, it must be replaced. Other than that, the coolant should be replaced every 5 years.

****Units found exclusively in EVC03 stations. The service manual's section on liquid cooling has a detailed explanation.**

© 2026 VESTEL MOBILITY - All rights reserved

8 - WIRELESS LAN TRANSMITTER SPECIFICATIONS

Frequency Ranges	Max Output Power
2400 - 2483,5 MHz (CH1 - CH13)	< 100 mW
5150 - 5250 MHz (CH36 - CH48)	< 200 mW **(*)**
5250 - 5350 MHz (CH52 - CH64)	< 200 mW **(*)**
5470 - 5725 MHz (CH100 - CH140)	< 200 mW **(*)**

(*) '< 100 mW' for the Ukraine

Country Restrictions

This Wireless LAN equipment is intended for home and office use in all EU countries, the UK and Northern Ireland (and other countries following the relevant EU and/or UK directive). The 5.15 – 5.35 GHz band is restrictions indoor operations only in all EU countries, the UK and Northern Ireland (and other countries following the relevant EU and/or UK directive). Public use is subject to general authorisation by the respective service provider.

Country	Restriction
Russian Federation	Indoor use only
Israel	5 GHz band only for 5180 MHz-5320 MHz range

The requirements for any country may change at any time. It's recommended that user checks with local authorities for the current status of their national regulations for both 2.4 GHz and 5 GHz wireless LANs.

Hereby, Vestel Mobilite SAN. VE TİC. A.Ş., declares that the radio equipment type EVC is in compliance with Directive 2014/53/EU and Radio Equipment Regulations 2017. The full text of the EU declaration of conformity is available at the following address: doc.vosshub.com.

© 2026 VESTEL MOBILITY - All rights reserved

VESTEL
MOBILITY

VESTEL MOBİLİTE SANAYİ VE TİCARET A.Ş. EGE SERBEST BÖLGE ŞUBESİ

Zafer SB Mah. Ayfer Sok. No:22 İç Kapı No:1 Gaziemir, İzmir/ TÜRKİYE

Telefon (pbx) : 90 (232) 251 72 90 Fax : 90 (232) 251 73 13

Gaziemir V.D. : 837 001 0241